Bassline
Custom Table Top

The root of inspiration for this table top design are the works of mid-century furniture and architectural designs. While there are many design elements that lend themselves to this era of design, this table finds elements inspired by the work of Japanese-American furniture design and architect George Nakashima. Similar to Nakashima's furniture, attention to craftsmenship, utility, and a poetic aesthetic were important.

Design by R. Northcutt

Lumber Choice

Ash - As a lighter white or yellow colored wood, Ash wood's grain patterns of brown and reddish brown give the wood depth and visual interest. Said to be a great in strength, this wood is known to react well to bending. This has given Ash a rightful place in wood crafted furniture. As the table top compent of this design, Ash is purposful with its strength abilities. With the woods natural properties, the large surface will bring visual interest to the design.

Cherry - This wood is nothing less than an attractive hardwood. With its pink to reddish brown coloring and various grain patterns Cherry displays strength, lending itself well to furniture design. Furniture made of Cherry will last many generations, and as it the wood ages, the color will darken displaying a deeper reddish brown tone. As a main component of the structure to this table top, Cherry wood displays itself as a strong backbone to its contrasting counter parts.

Pairing Ash and Cherry into the design of this table top is a choice of strength and coloring. The distict grain patterns together work in contrast, while color tones draw them together.

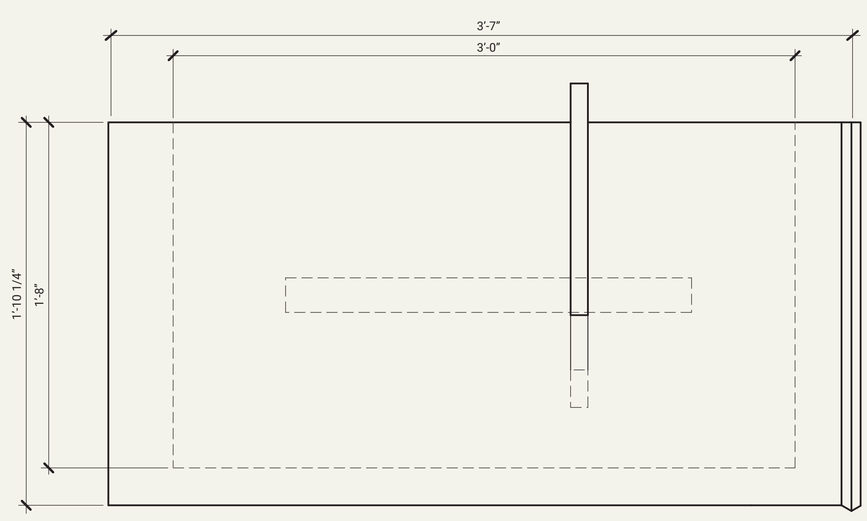

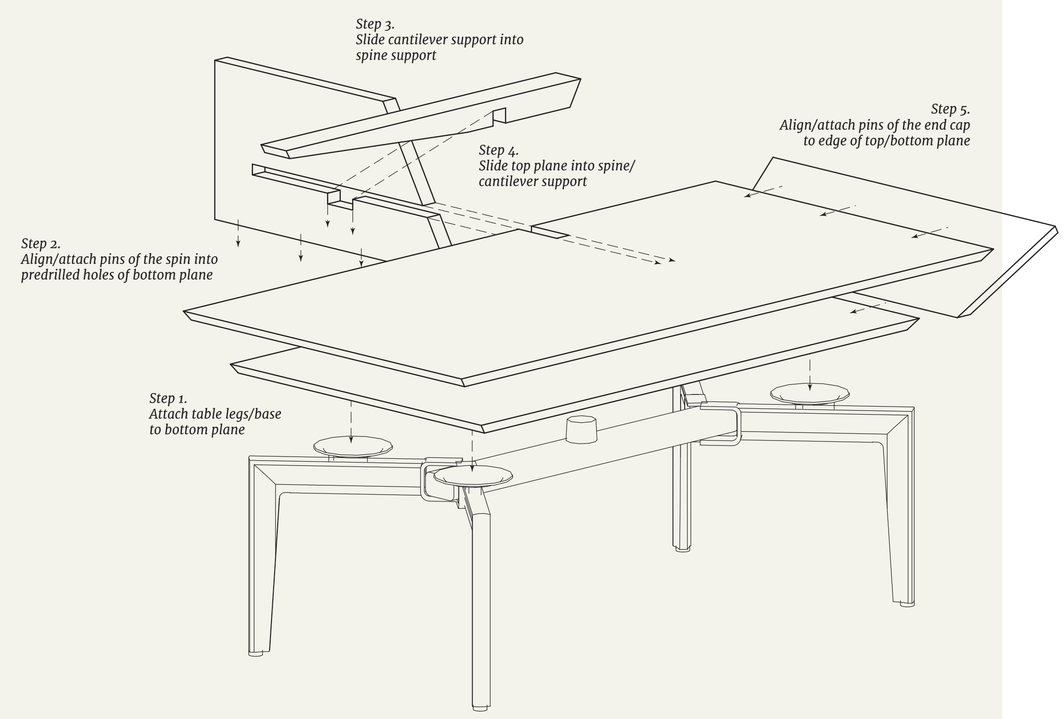

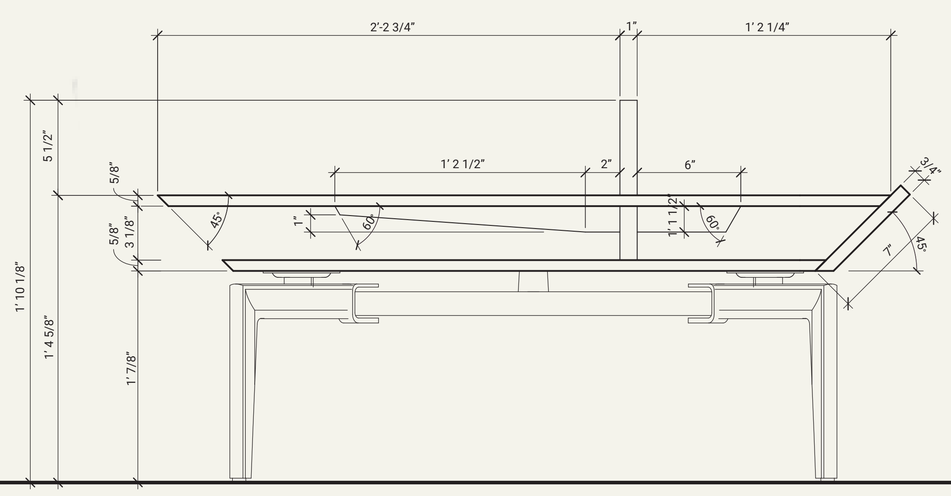

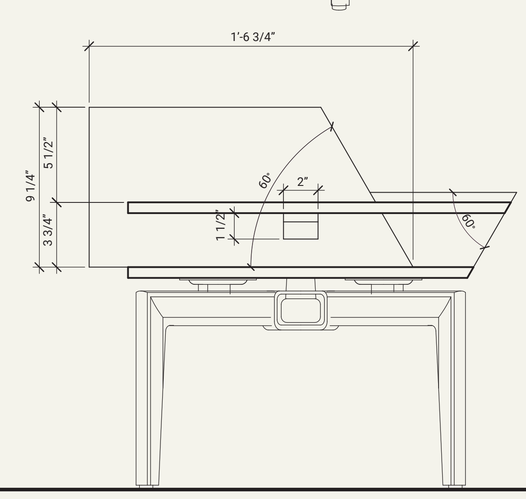

Table Top Care Insutructions
- Apply 2 coasts of Linseed Oil, Danish or Wax polish twice a year to protect wood surface
- Clear of spills imediatly to prevent damage to wood surface
- Keep clear of direct sun and/or heat source to prevent sun damage and potential deformation of wood

Team: R. Northcutt | Team Captin: Ryan Northcutt | Company: WNB Architects Inc

wnbarchitects